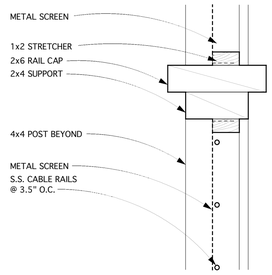

20 SCREENED PORCH SECTION
A6.2 SCALE: 3" = 1'-0"

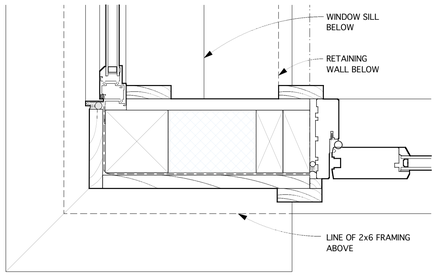

NOTE:
SEE 5/A6.1 FOR MIN.
TYPICAL WDW. & DOOR
FLASHING REQMNTS.

16 WALL @ LOWER LEVEL
A6.2 SCALE: 3" = 1'-0"

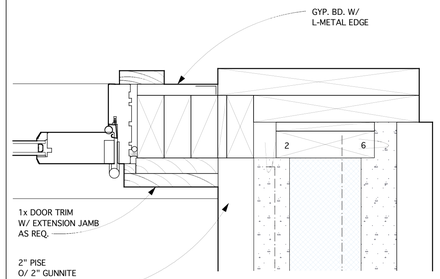

NOTE:
SEE 5/A6.1 FOR MIN.
TYPICAL WDW. & DOOR
FLASHING REQMNTS.

12 DOOR @ LOWER LEVEL
A6.2 SCALE: 3" = 1'-0"

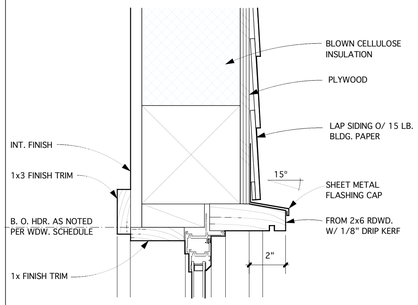

NOTE:
SEE 5/A6.1 FOR MIN. TYP.
WDW. & DOOR FLASHING REQS.

8 WINDOW HEAD @ ALUM. WDW.
A6.2 SCALE: 3" = 1'-0"

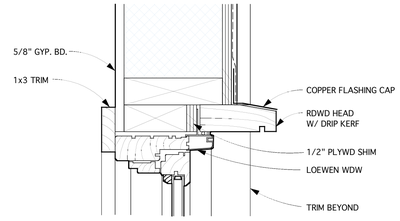

4 WOOD WINDOW HEAD IN BATTEN AND PANEL
A6.2 SCALE: 3" = 1'-0"

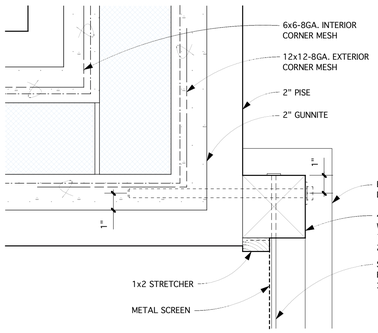

19 SCREENED PORCH PLAN @ CORNER
A6.2 SCALE: 3" = 1'-0"

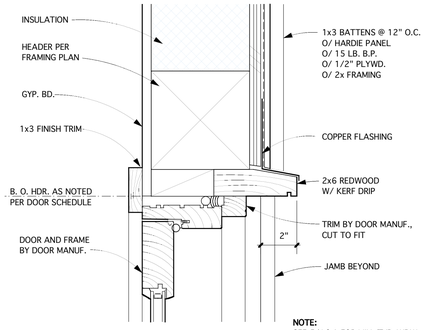

NOTE:
SEE 5/A6.1 FOR MIN. TYP. WDW.
& DOOR FLASHING REQS.

15 EXTERIOR DOOR HEAD IN FRAME WALL
A6.2 SCALE: 3" = 1'-0"

11 NOT USED
A6.2 SCALE: X" = 1'-0"

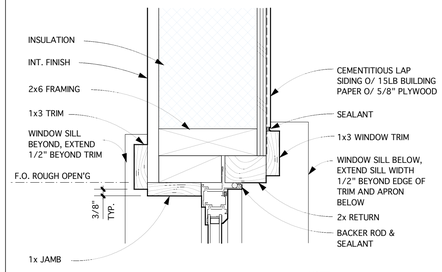

NOTE:
SEE 5/A6.1 FOR MIN. TYP. WDW. &
DOOR FLASHING REQS.

7 ALUM. WINDOW JAMB, TYP.
A6.2 SCALE: 3" = 1'-0"

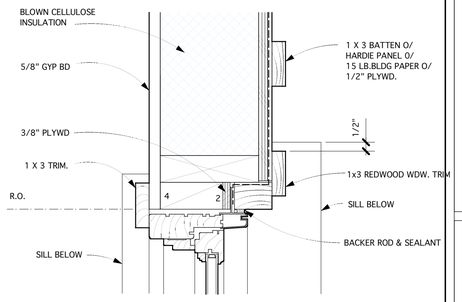

NOTE: SEE 5/A6.1 FOR TYPICAL
WDW & DOOR FLSHG REQM'TS

3 WOOD WINDOW HEAD
A6.2 SCALE: 3" = 1'-0"

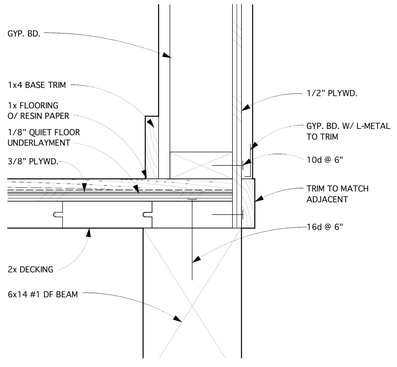

18 TRIM @ 6x14
A6.2 SCALE: 3" = 1'-0"

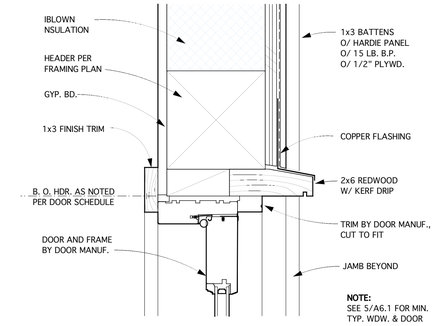

NOTE:
SEE 5/A6.1 FOR MIN.
TYP. WDW. & DOOR
FLASHING REQS.

14 OUTSWING EXTERIOR DOOR HEAD
A6.2 SCALE: 3" = 1'-0"

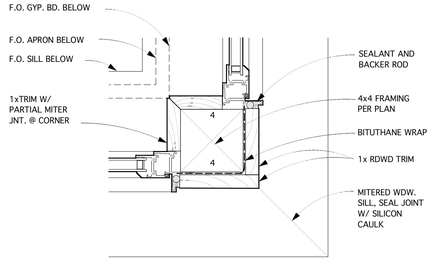

NOTE:
SEE 5/A6.1 FOR MIN.
TYPICAL WDW. & DOOR
FLASHING REQMNTS.

10 ALUM. WDW. JAMB @ CORNER
A6.2 SCALE: 3" = 1'-0"

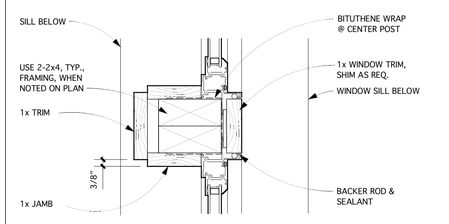

NOTE:
SEE 5/A6.1 FOR MIN. TYP. WDW. &
DOOR FLASHING REQS.

6 ALUM. WDW. MUNTIN JAMB
A6.2 SCALE: 3" = 1'-0"

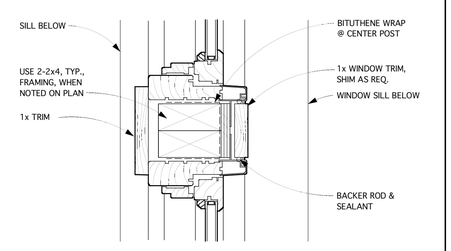

NOTE:
SEE 5/A6.1 FOR MIN. TYP. WDW. &
DOOR FLASHING REQS.

2 WOOD WINDOW MUNTIN JAMB
A6.2 SCALE: 3" = 1'-0"

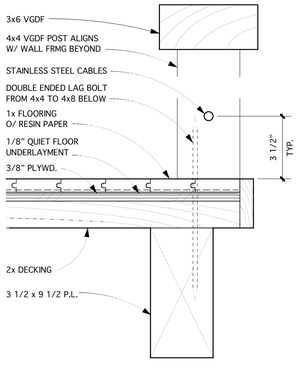

17 LOFT GUARD RAIL
A6.2 SCALE: 3" = 1'-0"

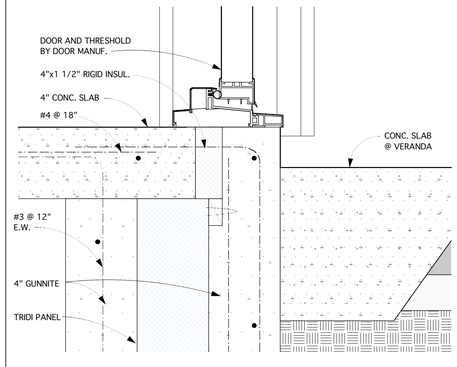

13 ENTRY SILL W/ OUTSWING EXTERIOR DOOR
A6.2 SCALE: 3" = 1'-0"

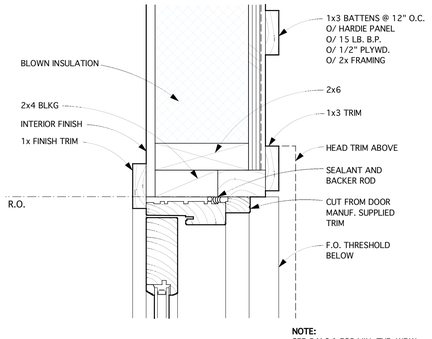

NOTE:
SEE 5/A6.1 FOR MIN. TYP. WDW.
& DOOR FLASHING REQS.

9 EXTERIOR DOOR JAMB IN FRAME WALL
A6.2 SCALE: 3" = 1'-0"

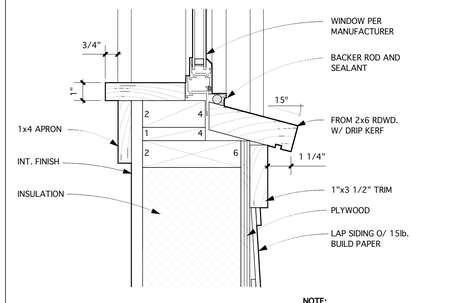

NOTE:
SEE 5/A6.1 FOR MIN. TYP.
WDW. & DOOR FLASHING REQS.

5 WINDOW SILL @ ALUM. WDW
A6.2 SCALE: 3" = 1'-0"

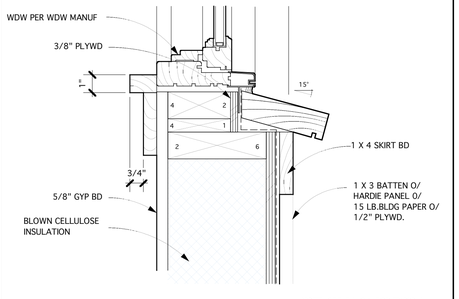

NOTE: SEE 5/A6.1 FOR TYPICAL
WDW & DOOR FLSHG REQM'TS

1 WOOD WINDOW SILL
A6.2 SCALE: 3" = 1'-0"

ARKIN • TILT
ARCHITECTS

Ecological
Planning
& Design

1101 8th St.
Suite 180
Berkeley, CA 94710

telephone
510.528.9830

facsimile
510.528.0206

e mail
info@arkintilt.com

website
www.arkintilt.com

NEW RESIDENCE for
CINDY BICKERSTAFF & MARK HOLLER
1871 MOUNT VEEDER ROAD
NAPA, CA 94558
A.P.N. 34-110-47

DETAILS

DATE: 03.15.06
JOB: BH
SCALE: AS NOTED
DRAWN:
SHEET: A6.2